ASSEMBLY INSTRUCTION

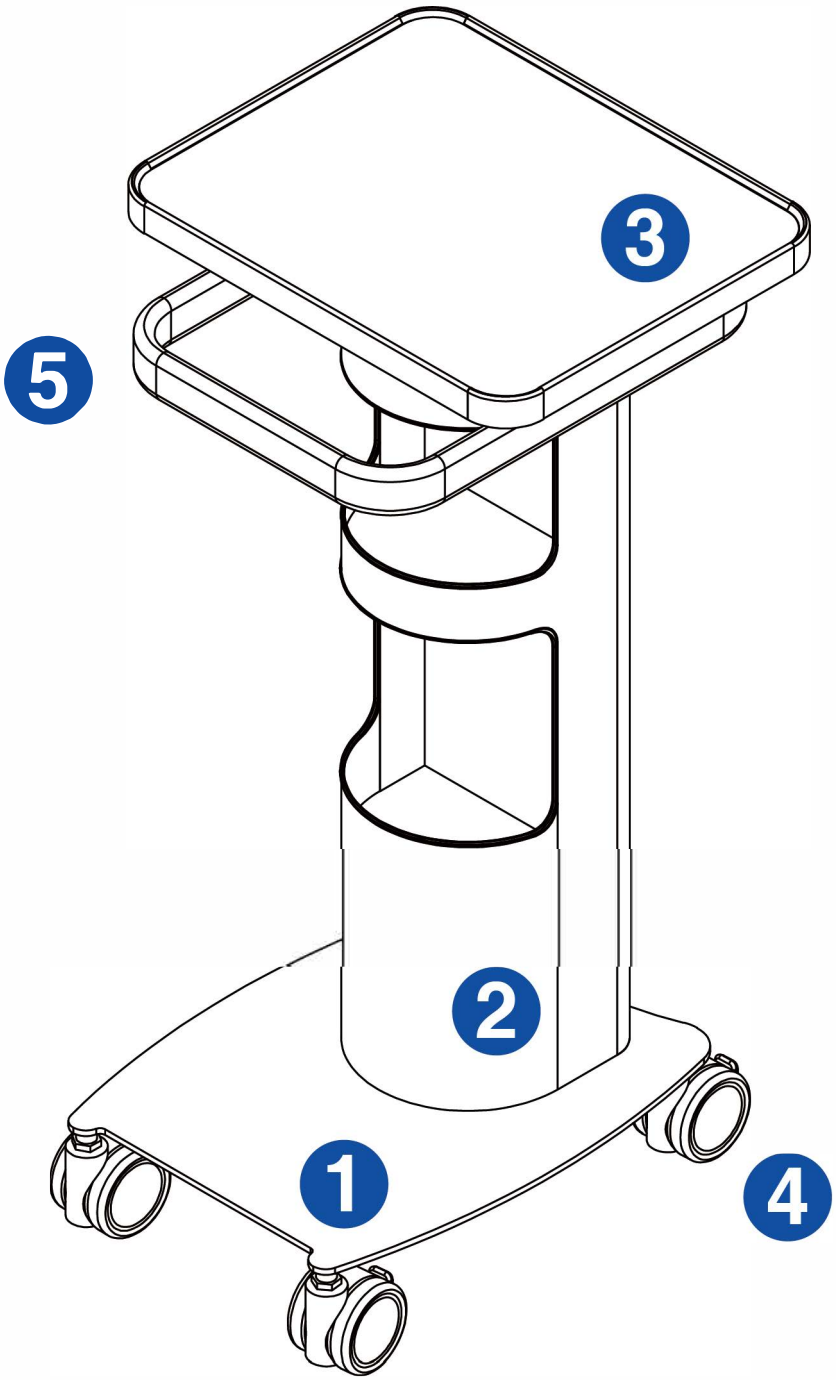

Parts List

1

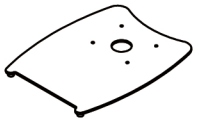

Base - 1

2

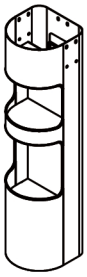

Center Post - 1

3

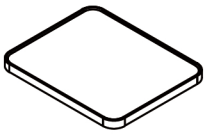

Desktop Tray - 1

4

Casters - 4

5

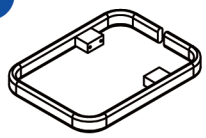

Handle - 1

6

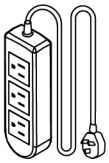

Power Strip - 1

Screw Pack

a

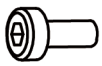

M6 **Short** Screws - 10

b

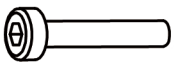

M6 **Long** Screws - 4

Tools Pack

A

5.0mm **Short** Wrench - 1

B

5.0mm **Long** Wrench - 1

C

Open-end Wrench
14mm - 1

Installation Procedure

Step 1: Assemble the Base and Center Post

1. Unpack the Base(1) and caster components from the screw pack.
2. Using the Open-end Wrench(C) in the tool kit, attach the Casters(4) to the Base by screwing them in clock wise (see illustration below).
3. Next, take out the Center Post(2) and invert it.
4. Align the four holes on the bottom of the Base with the four circular holes on the Center Post.
5. Use the M6 **Long** Screws(b) to fasten the Base to the Center Post.
6. Finally, tighten the screws securely using the 5.0mm Wrench(A/B) provided in the tool kit.

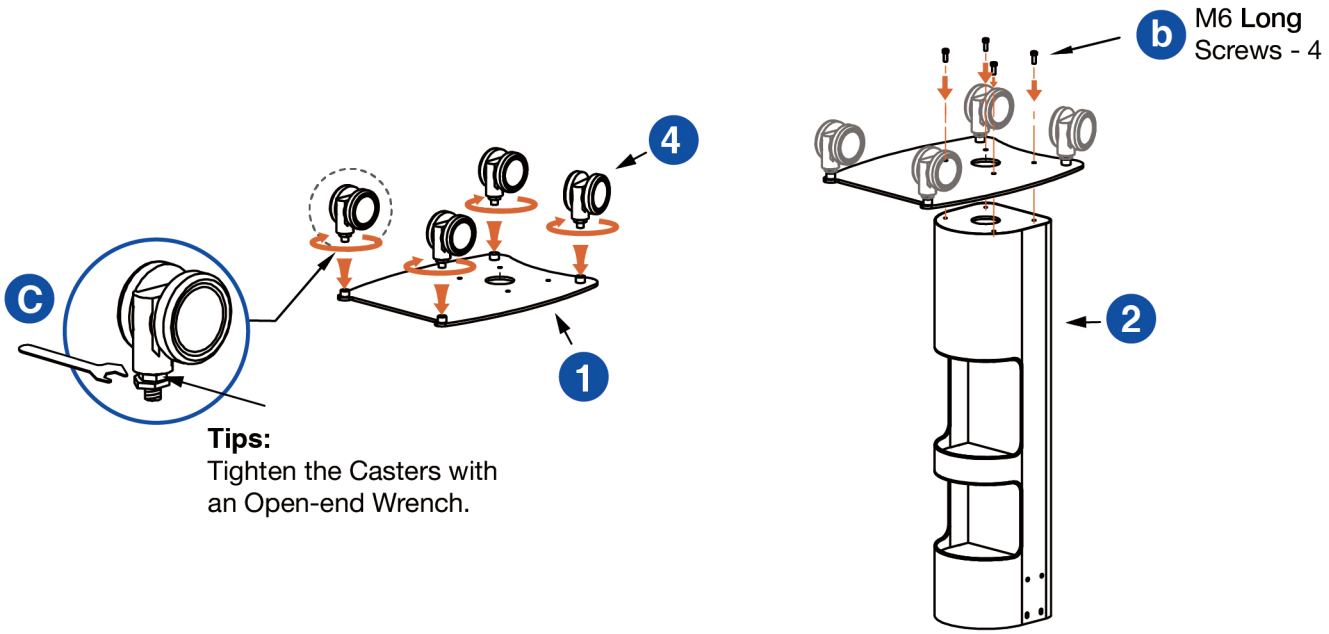

Step 2:

Insert the Handle(5) into the Center Post(2) and align it with the four circular holes below. Using M6 **Short** Screws(a), secure the Handle by screwing into the four holes on both sides from inside of the Center Post.

Finally, use the 5.0mm Wrench(A/B) from the tool kit to tighten the screws firmly (as shown in the graphic below).

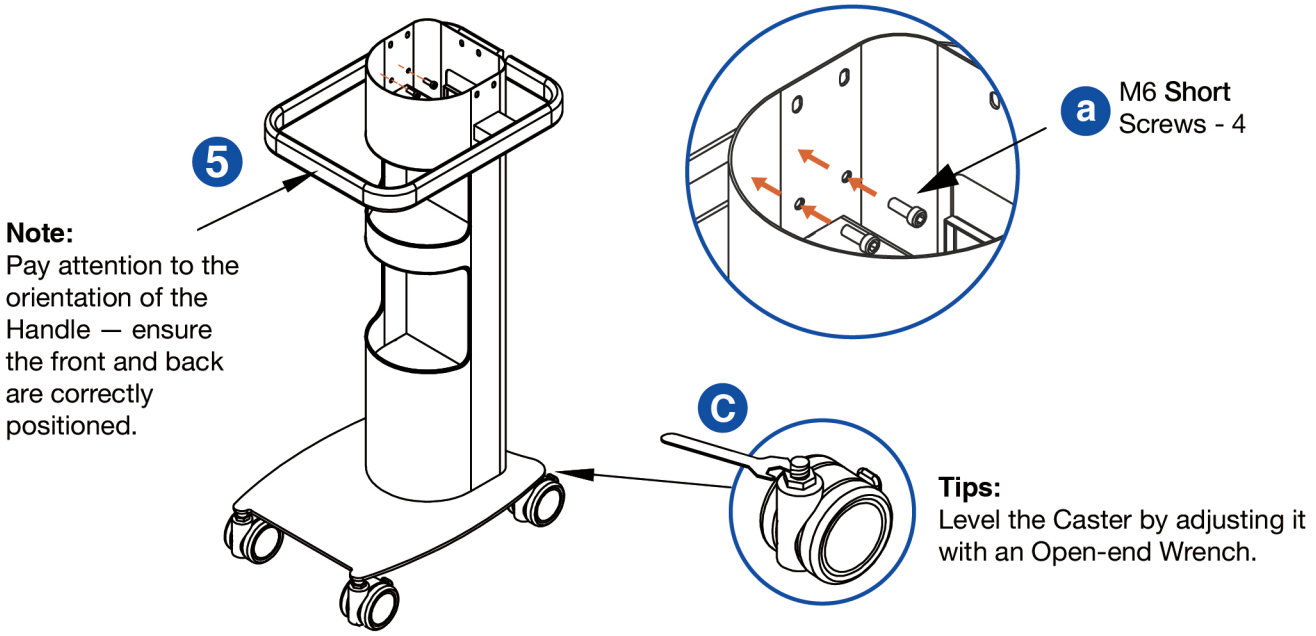

Step 3:

Align the holes on the underside of the tray with the six holes located on the left and right rear sides of the Center Post(2). Secure the tray using M6 **Short** Screws(a), then tighten them using the 5.0mm **Short** Wrench(A) from the tool kit (As shown in the graphic below).

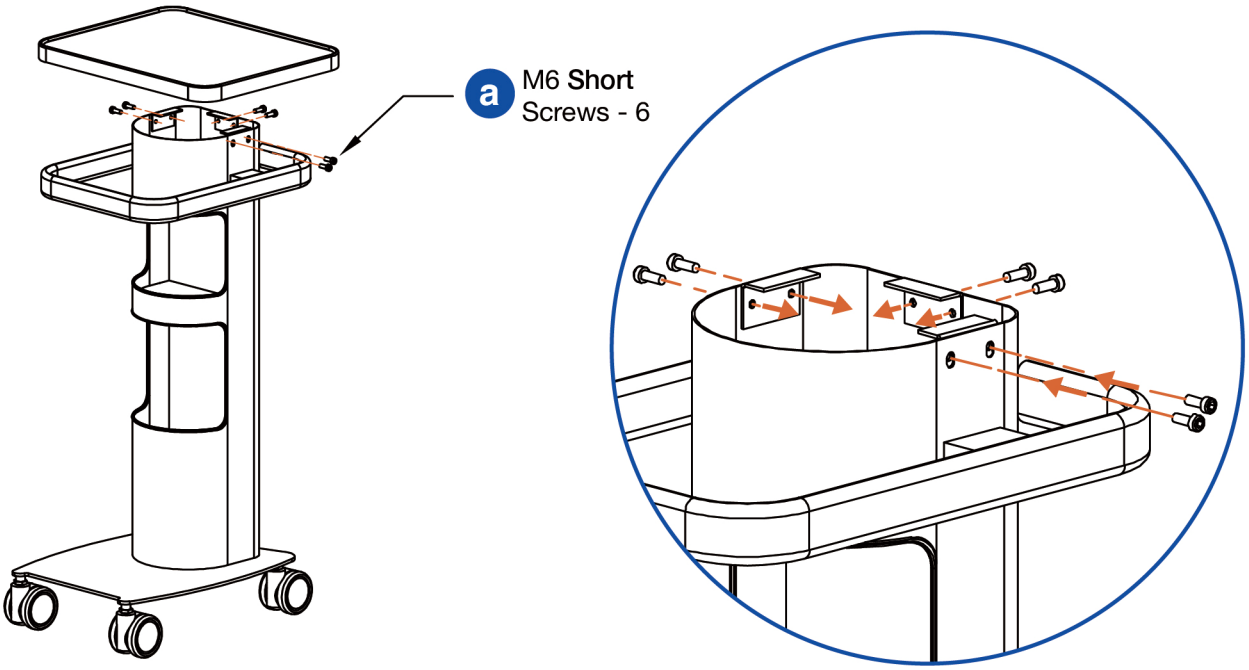

Application Scenario

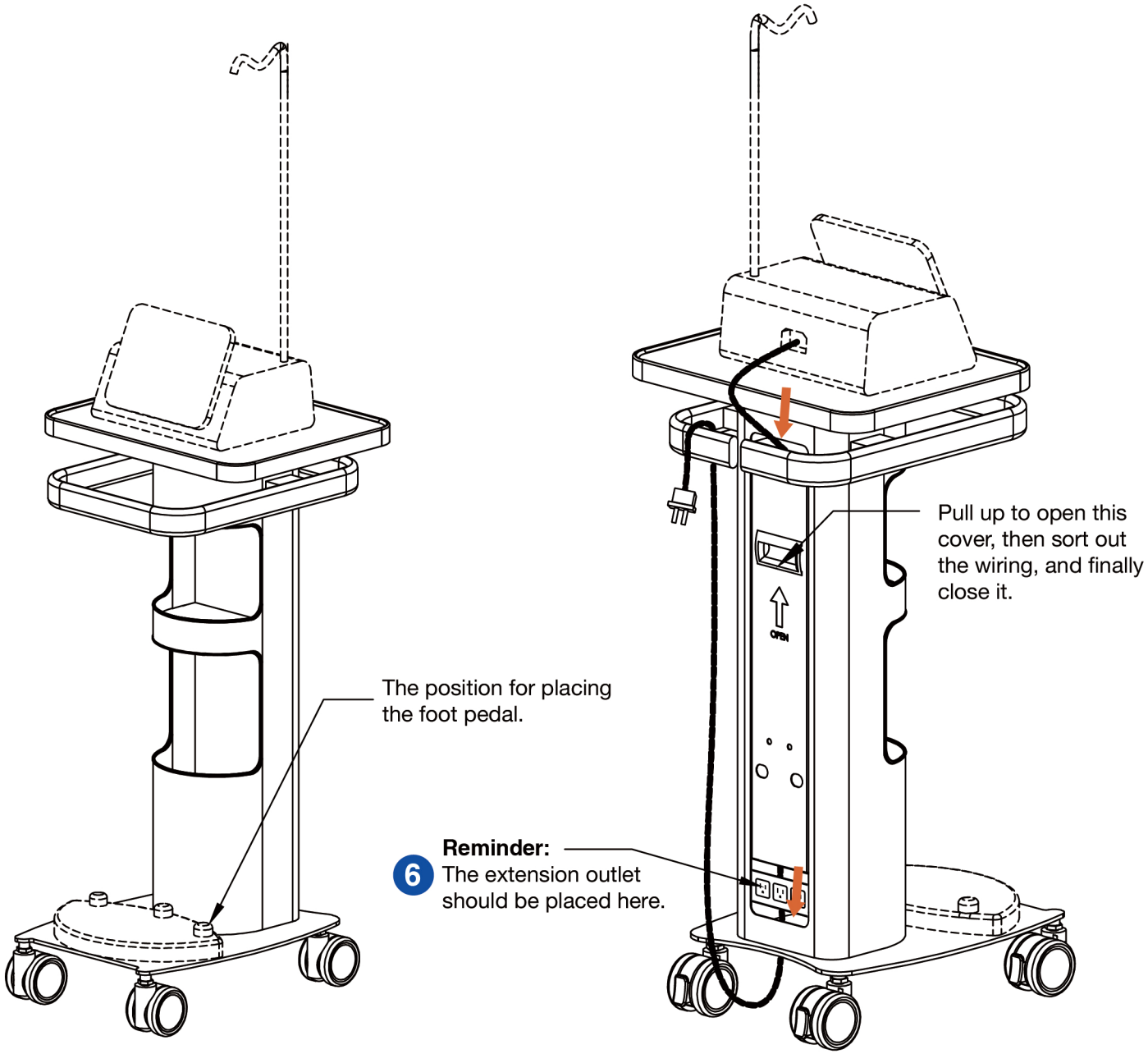

The equipment shown with dotted lines in the illustration is for demonstration purposes only and is not included with this product.

Product Care and Maintenance

Cleaning the Cart Exterior
Use a cleaning brush or sponge moistened with water and a suitable detergent to thoroughly clean the exterior surface of the cart. Pay special attention to areas where dirt tends to accumulate, such as the bottom, side walls, and handles.

Maintenance and Inspection
During the cleaning process, inspect the wheels, connectors, handles, and other components for any signs of damage or wear. If necessary, perform maintenance or repairs promptly to ensure the cart remains in good working condition.

Regular Cleaning Benefits
Routine cleaning helps reduce bacterial growth, prolongs the service life of the cart, and ensures more effective cleaning performance.

Safety Precautions
Always wear appropriate personal protective equipment (PPE), such as gloves and a mask, to avoid injury or exposure to waste or chemical cleaners.

Storage and Transportation Conditions

Temperature and Humidity
Store the equipment at temperatures not exceeding 45°C, with relative humidity maintained between 50%–65% to prevent damage from moisture or rust.

Transport Guidelines
The equipment must be handled safely during loading, unloading, transportation, and storage, and should be able to withstand normal and occasional extreme conditions, including vibration, shock, pressure, and temperature or humidity fluctuations.

Environmental Protection
Avoid exposure to direct sunlight, rain, ice, snow, or other harsh environmental elements during storage or transport.

Electromagnetic Protection
Keep the equipment away from areas with electromagnetic interference or strong magnetic fields to prevent functional damage.

Product Information

Dental Multi-Function Trolley Cart - Compact
Warranty Period: 3 years
Origin: Made in China